IT 2Z16 CC ZZ ZZ

FINISHES:

CUSTOM.NF

CUSTOM.US

GOLD

CHROME

CUSTOM.NF

MATT WHITE

OXYDIZED

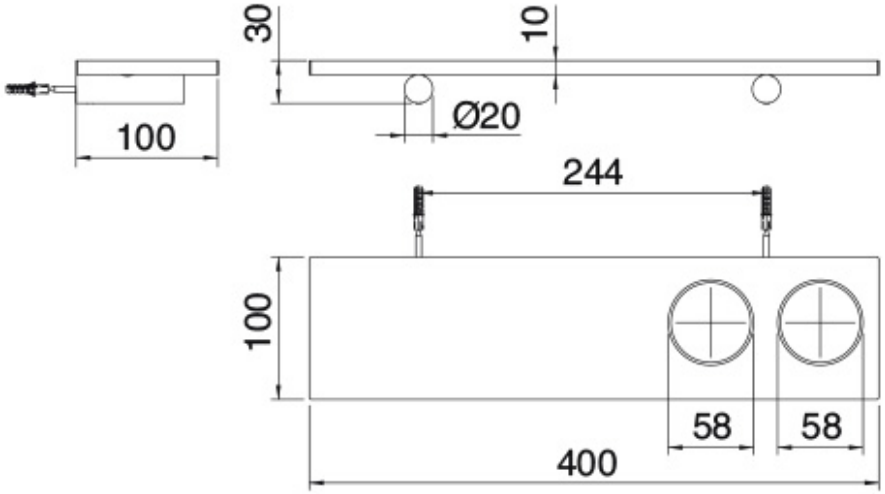

RUBINETTERIE treemme
instruments for water