1000

FINISHES:

CHROME

BRUSH NICKEL

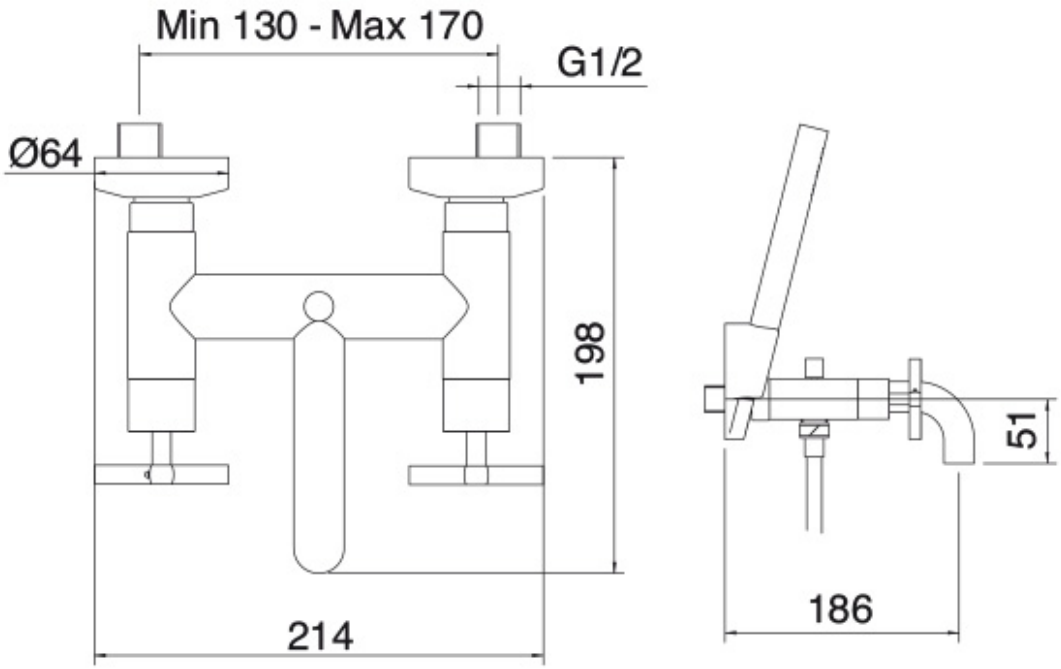

RUBINETTERIE
treemme
instruments for water