2218

FINISHES:

WHITE CHROME

CHROME

BRUSH NICKEL

BLACK CHROME

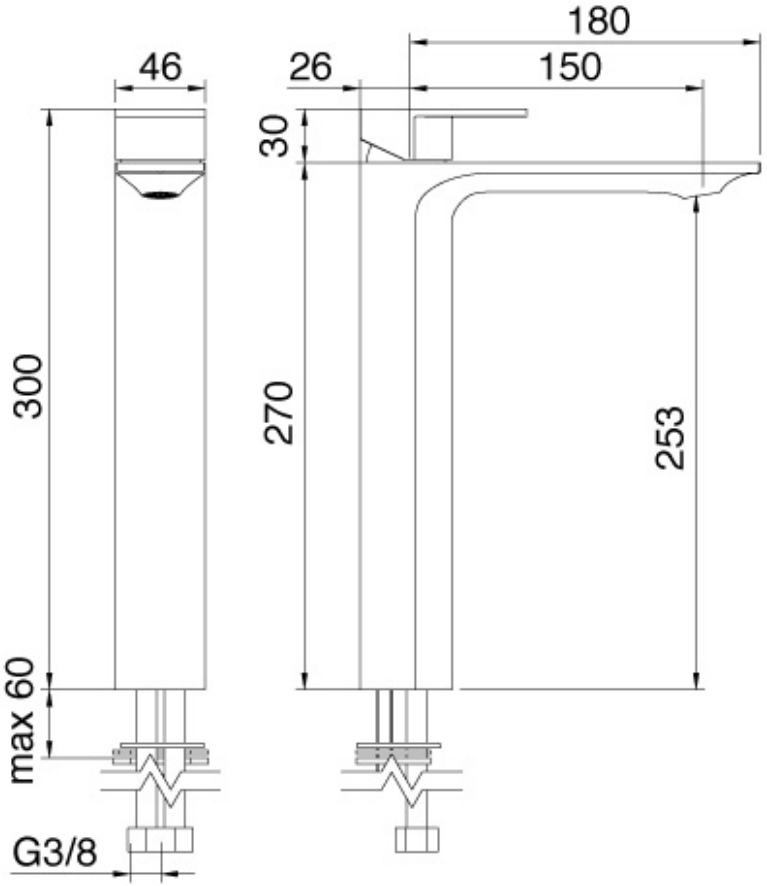

RUBINETTERIE treemme
instruments for water