3635

FINISHES:

CHROME

CHROME / GOLD

GOLD

BRUSH NICKEL

COPPER
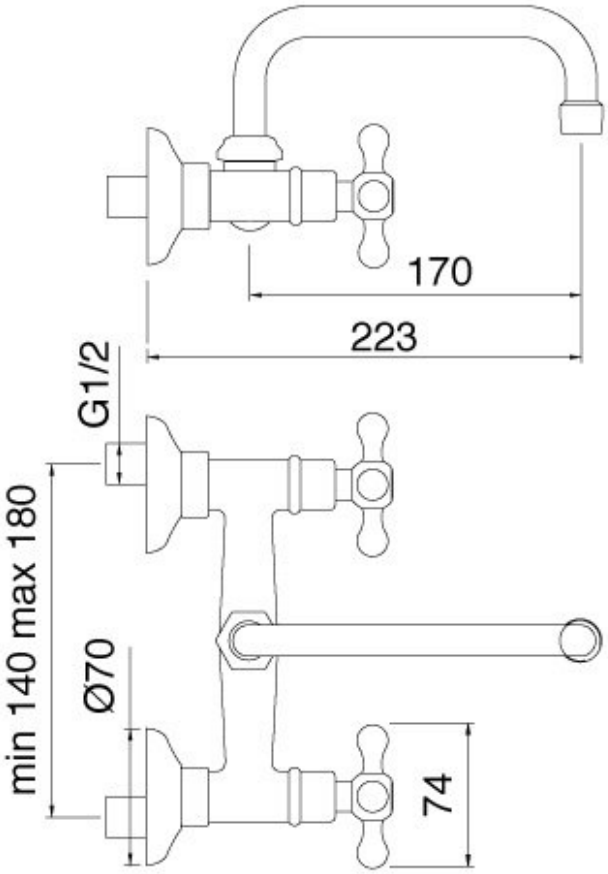
BURNISHED