rtsa123

FINISHES:

FROSTED INOX

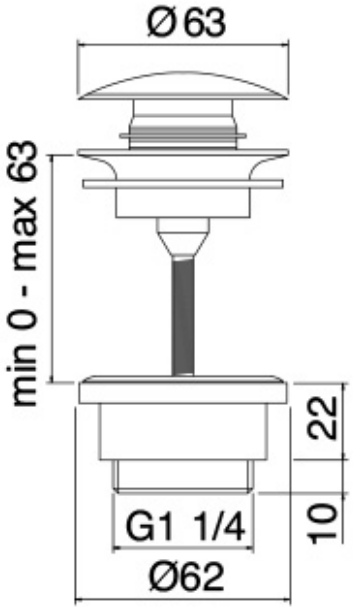

RUBINETTERIE treemme
instruments for water